FUSDV-5-15T

INPUT VOLTAGE : 200~240VAC
OUTPUT VOLTAGE : 15VDC

SWITCHING POWER SUPPLY SPECIFICATION

Drawing:

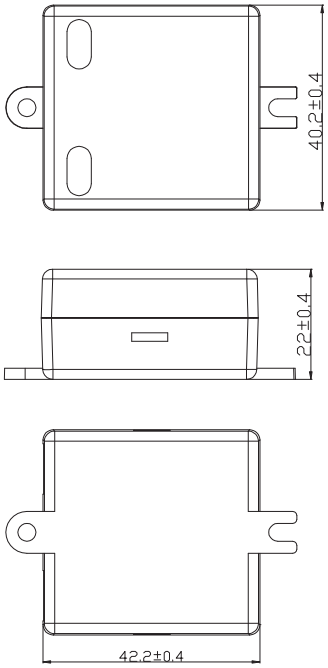

ELECTRONICAL SPECIFICATION

INPUT VOLTAGE : 200~240 Vac INPUT RANGE VOLTAGE 180~264 Vac
INPUT FREQUENCY : 50 Hz
INPUT CURRENT : 0.15 Amp. rms. at 200 Vac
INRUSH CURRENT : 5 Amp. peak at 200 Vac
6 Amp. peak at 240 Vac
Tested At Max. load 25¢J , Cool state
OUTPUT VOLTAGE : 15 V
REGULATION : ± 5 %
MIN. LOAD CURRENT : 0 A
MAX. LOAD CURRENT : 0.4 A
LOW POWER FACTOR
RIPPLE AND NOISE : 300 mVp-p Max. At 200 Vac, 50 Hz, Max. load 25¢J
NOISE TEST BANDWIDTH : 20 MHz
Each output bypassed by a 10uF electrolytic capacitor parallel with a 0.1uF ceramic capacitor to GND.
LINE REGULATION : INPUT = 200 ~ 240 Vac,output loaded at Max. load.
REGULATION = ± 5 %
TOTAL OUTPUT : 6 W
POWER EFFICIENCY : 60% Min. at 200~240 Vac 50 Hz, Max. load.
OVER CURRENT PROTECTION , SHORT CIRCUIT PROTECTION
OVER POWER PROTECTION : 18 W
OVER VOLTAGE PROTECTION : 18 Vdc Max.

MECHANICAL SPECIFICATION

DIMENSIONS: 42.2 (L) * 40.2 (W) * 22(H)mm (Tolerance as drawing)
WEIGHT: 40 g Max.
OPERATING TEMPERATURE: 0¢J To 50¢J
STORAGE TEMPERATURE: -20¢J To 60¢J
RELATIVE TEMPERATURE: 40¢J ± 2¢J

Input Cable : TERMINAL

Output Cable : TERMINAL

STANDARD

Safty:EN61558. **EMC**:EN55014-1,EN55014-2,EN61000-3-2,EN61000-3-3.

RELATIVE HUMIDITY 85% **RH. Non-condensing**

LABEL:

SIZE:35.5*28.5mm

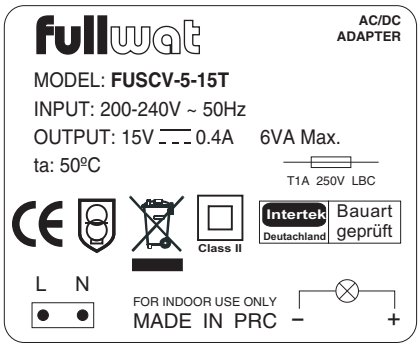

INNER BOX:

Material: WEB
BOX:60*46*32mm

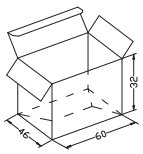

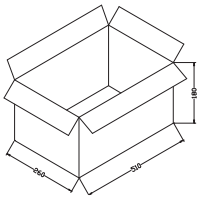

CARTON:510*260*180mm
Material: K=A No Nail

Q'TY	**200**	**PCS**
N.W. :	**8**	**KGS**
G.W.:	**9.1**	**KGS**
MEAS:	**0.85**	**CUFT**

PHOTO

http://www.ukai.com-ukai@ukai.com

Ukai s.a.

Ukai Bilbao-headquarter
Ribera Elorrieta, 7C
48015 - Bilbao - Spain
Tlfno: +34 94 474 52 52 /
Fax: +34 94 475 9710
E-mail: ukai@ukai.com http: // www.ukai.com

Madrid office
Av. Andalucia, 2
Zoco Piramides 2ª Planta - Oficina 211
28700 - S.S. de los Reyes. Madrid - Spain
Tlf: +34 91 659 03 58 / Fax: +34 91 659 05 58
E-mail: ukaimad@ukai.com

Barcelona office
C/ Orient 78 - 84
Edif. Inbisa. Planta 1 - Local 7
08172 - ST. Cugat del Vallés. Barcelona - Spain
Tlfno: +34 93 284 08 98
Fax: +34 93 210 67 65
E-mail: ukaibcn@ukai.com